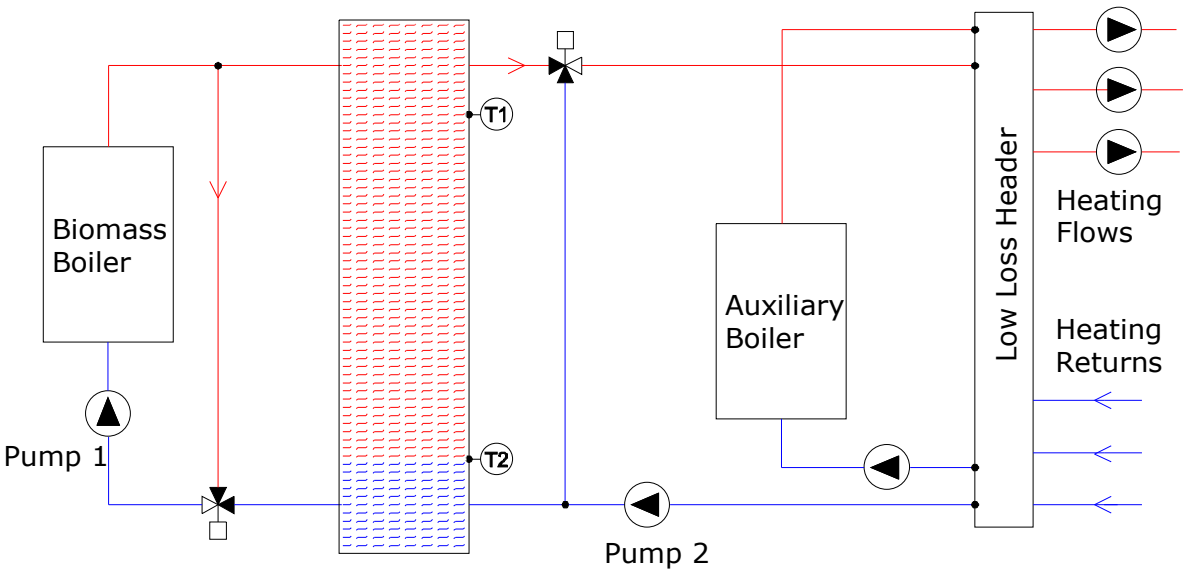
Biomass
Boiler
Pump 1
T1
T2
Auxiliary
Boiler
Pump 2
Low Loss Header
Heating
Flows
Heating
Returns